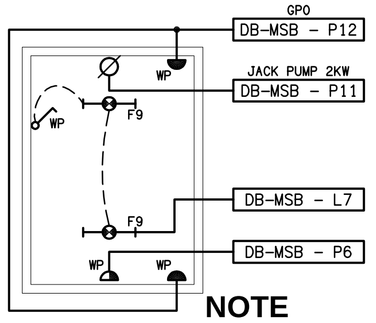

NOTE

CONFIRM ALL OUTLET POSITIONS WITHIN FIRE BOOSTER ROOM ON SITE WITH THE HYDRAULIC CONTRACTOR.

DETAIL A

FIRE BOOSTER ROOM

NOT TO SCALE

LEGEND

SITE PLAN

- ELECTRICAL SERVICES SWITCHBOARD, TYPE AS NOTED.
- COMMUNICATIONS RACK, TYPE AS NOTED.
- THREE PHASE ISOLATOR.
- CAR PARK LIGHT, TYPE AS NOTED.
- LIGHTING SWITCH LINE.
- ELECTRICAL PIT, AS NOTED ON DRAWING C0677a-E02.
- PITx — ELECTRICAL PIT, TYPE AS NOTED.
- CONDUIT ROUTE.
- C-x — x DENOTES CONDUIT TYPE.
- C1 — CCTV CAMERA MOUNTED ON CAR PARK LIGHT POLE.
- C2 — CCTV CAMERA MOUNTED ON CONCRETE WALL.
- CR — SECURITY CARD READER.
- CRI — SECURITY CARD READER C/W INTERCOM CALL STATION, BOLLARD MOUNTED AS NOTED.
- ES — SECURITY DOOR ELECTRIC STRIKE.
- GATE — SECURITY GATE CONTROLLER, BOLLARD MOUNTED AS NOTED.

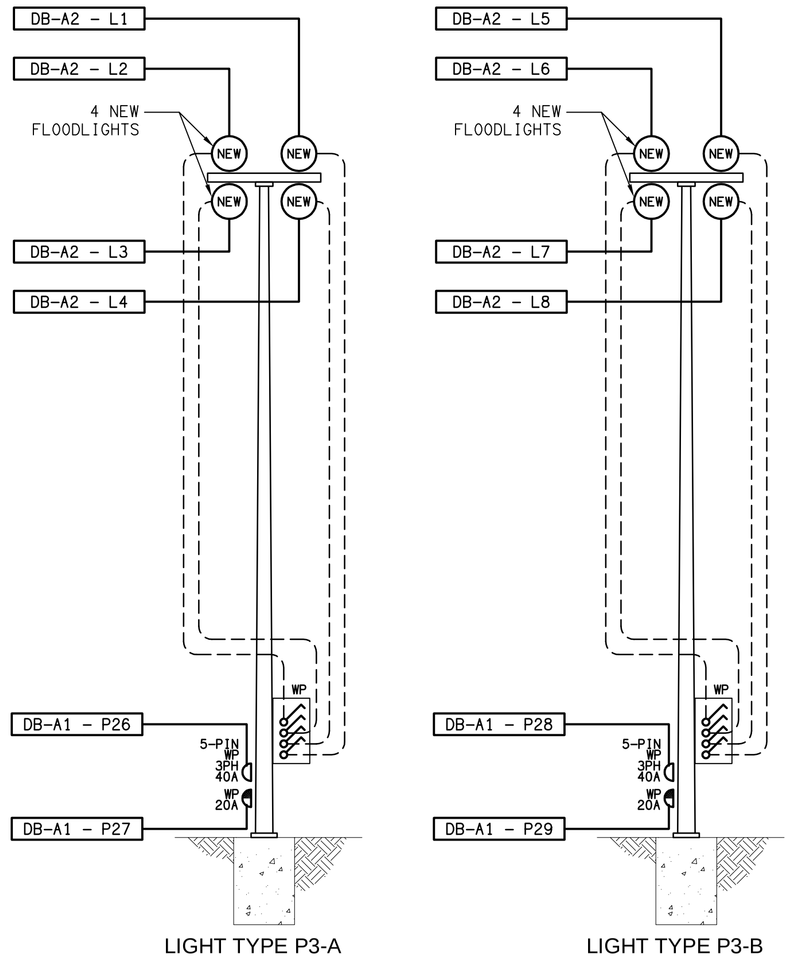

DETAIL B

TRAINING FIELD P3 FLOODLIGHT ELEVATIONS

NOT TO SCALE

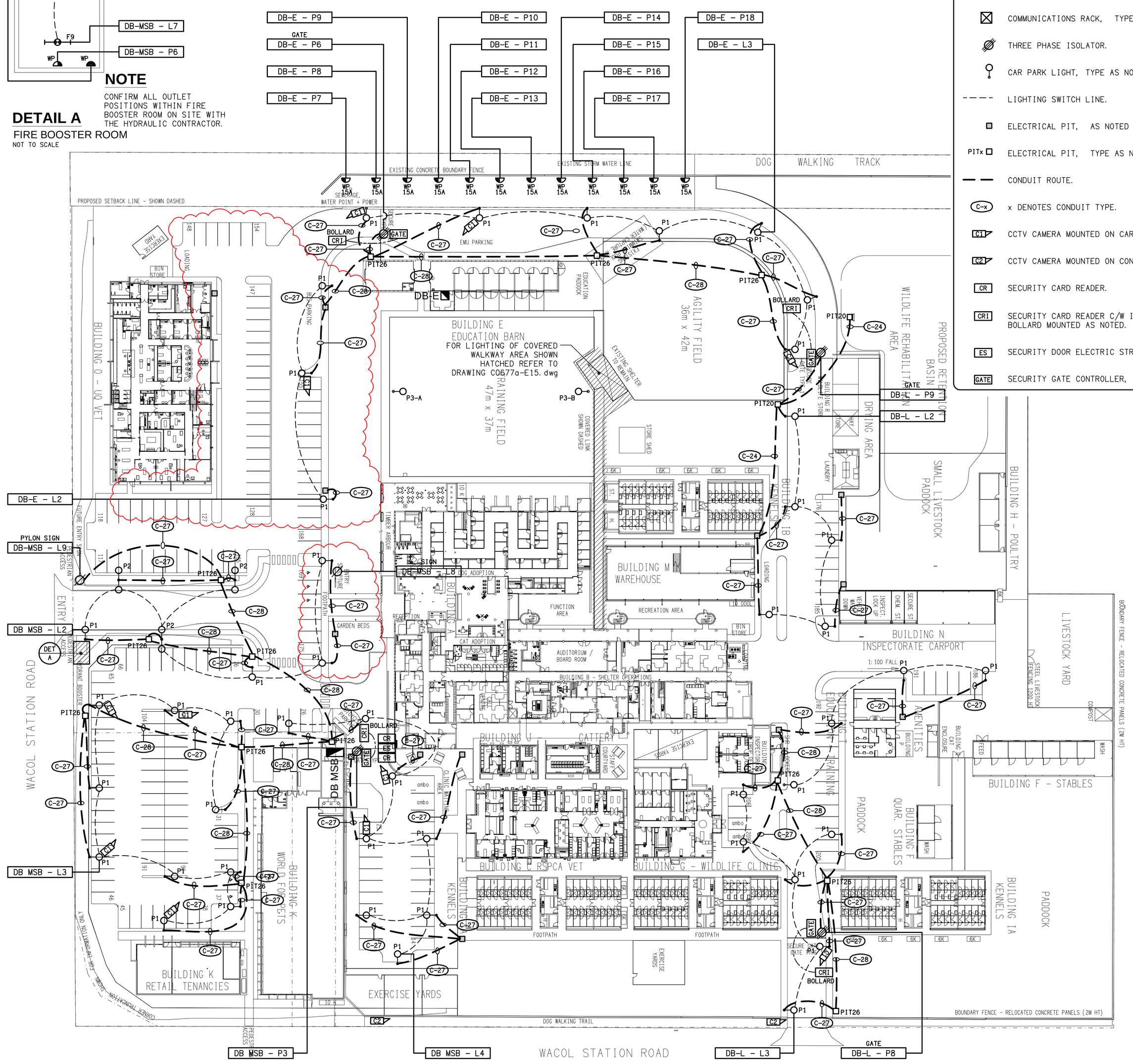

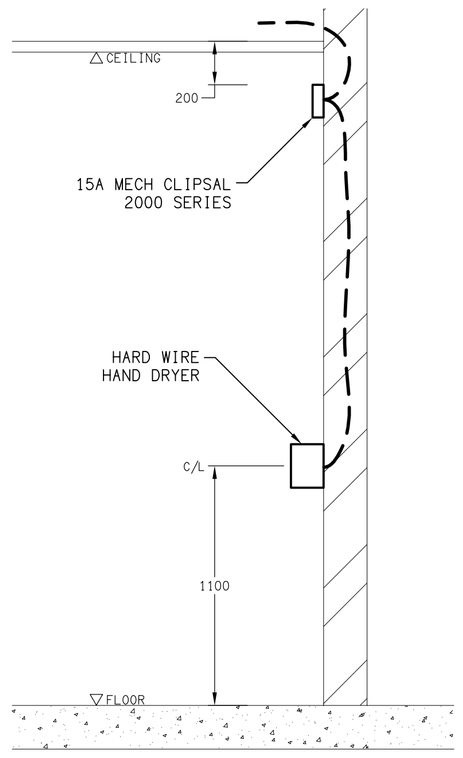

DETAIL C

HAND DRYER CONNECTION

NOT TO SCALE

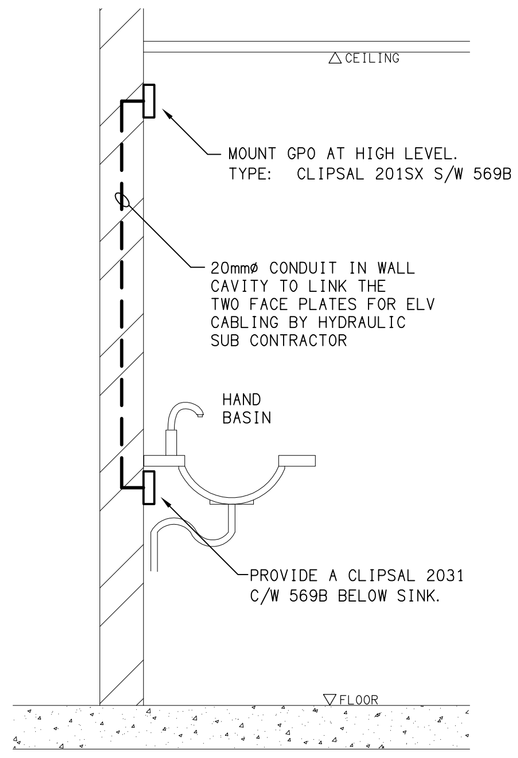

DETAIL D

AUTO TAP CONNECTION

NOT TO SCALE

REV:	DESCRIPTION:	DATE:
G	CONSTRUCTION	20/07/2011

OFFICE USE ONLY: DRAFT: CHECK: MARKUP:

ELECTRICAL DESIGN GROUP BRISBANE PTY LTD ACN 092 710 793

TRADING AS: ELECTRICAL DESIGN GROUP

THE COPYRIGHT OF THIS DRAWING REMAINS THE PROPERTY OF THE ELECTRICAL DESIGN GROUP.

USE FIGURED DIMENSIONS IN PREFERENCE TO SCALE.

ALL DIMENSIONS TO BE VERIFIED ONSITE.

ELECTRICAL DESIGN GROUP
ELECTRICAL BUILDING SERVICES CONSULTANTS

BRISBANE
P.O.Box 15, Sherwood Q.4075
Phone: (07) 3278 4375
Fax: (07) 3716 0222

GOLD COAST
P.O.Box 4249, Ashmore Q.4214
Phone: (07) 5597 7551
Fax: (07) 5597 7552

PROJECT: RSPCA - WACOL

WACOL STATION ROAD, WACOL

DRAWING:

ELECTRICAL SERVICES
SITE PLAN
LIGHTING & SECURITY LAYOUT

SCALE:	PROJECT NO:	DRAWING NO:	REVISION:
1:500 AT A1	C0677a	E03	G