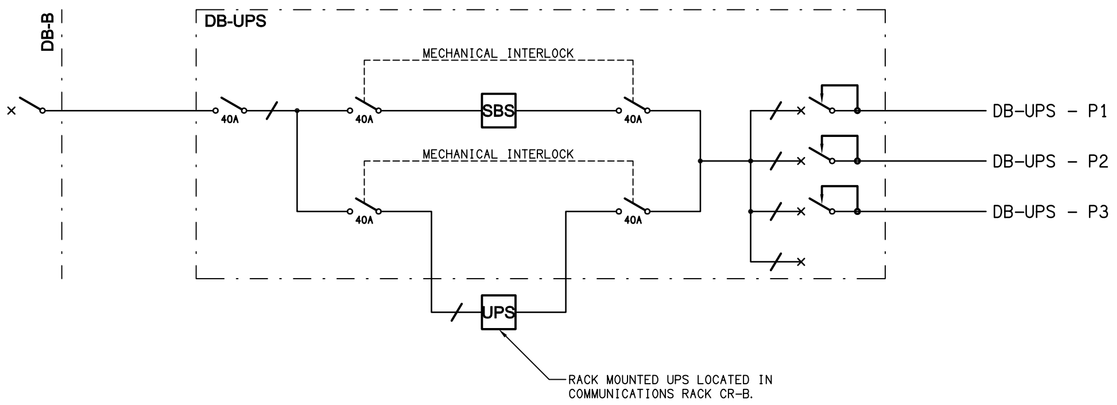

SCHEMATIC
UPS ARRANGEMENT
NOT TO SCALE

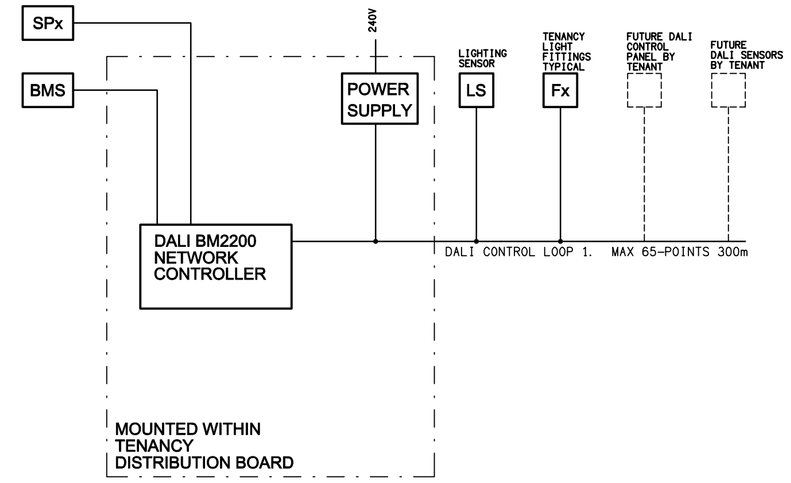

SCHEMATIC
TYPICAL COMMERCIAL TENANCY DALI CONTROL
NOT TO SCALE

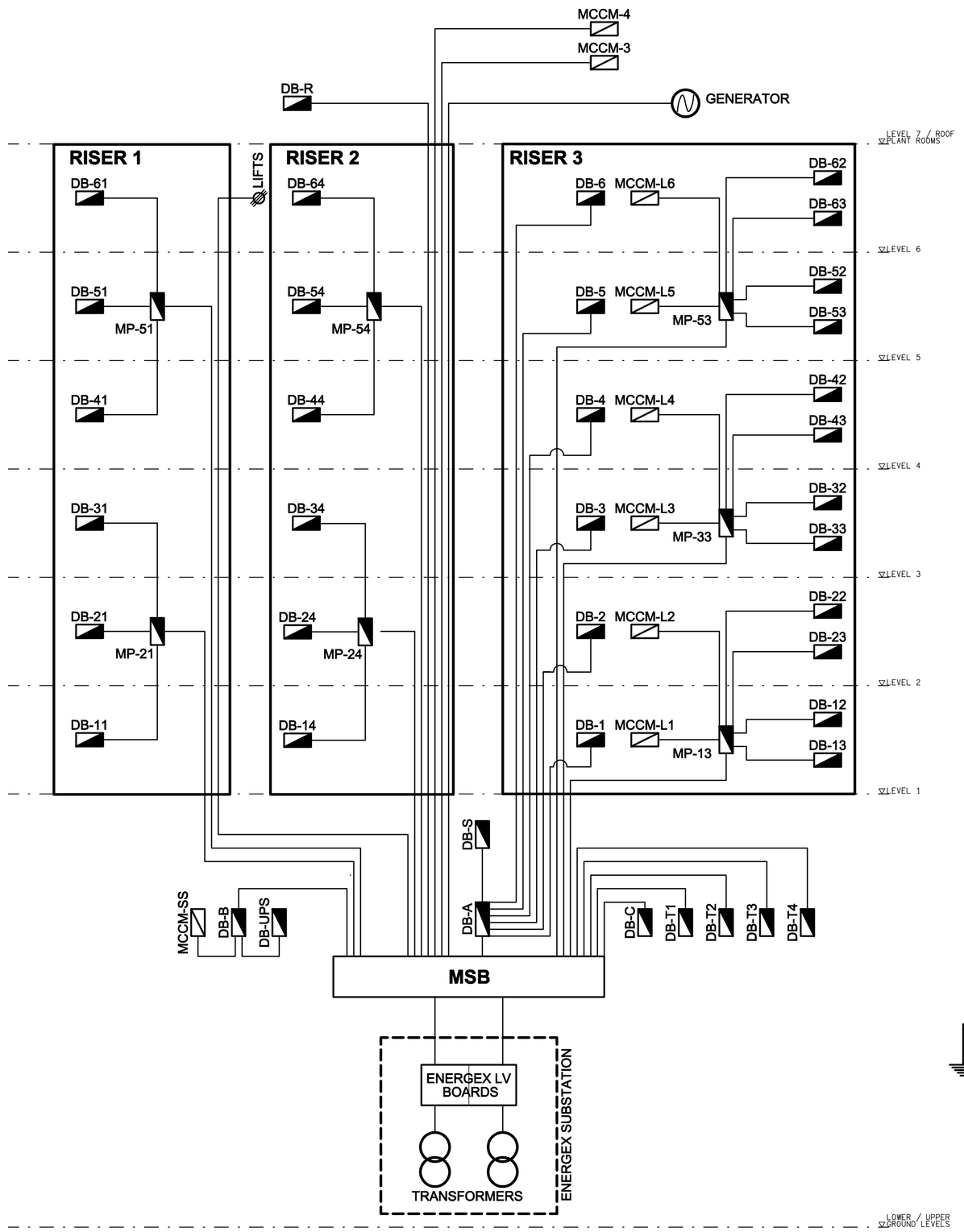

SCHEMATIC
POWER DISTRIBUTION OVERVIEW
NOT TO SCALE

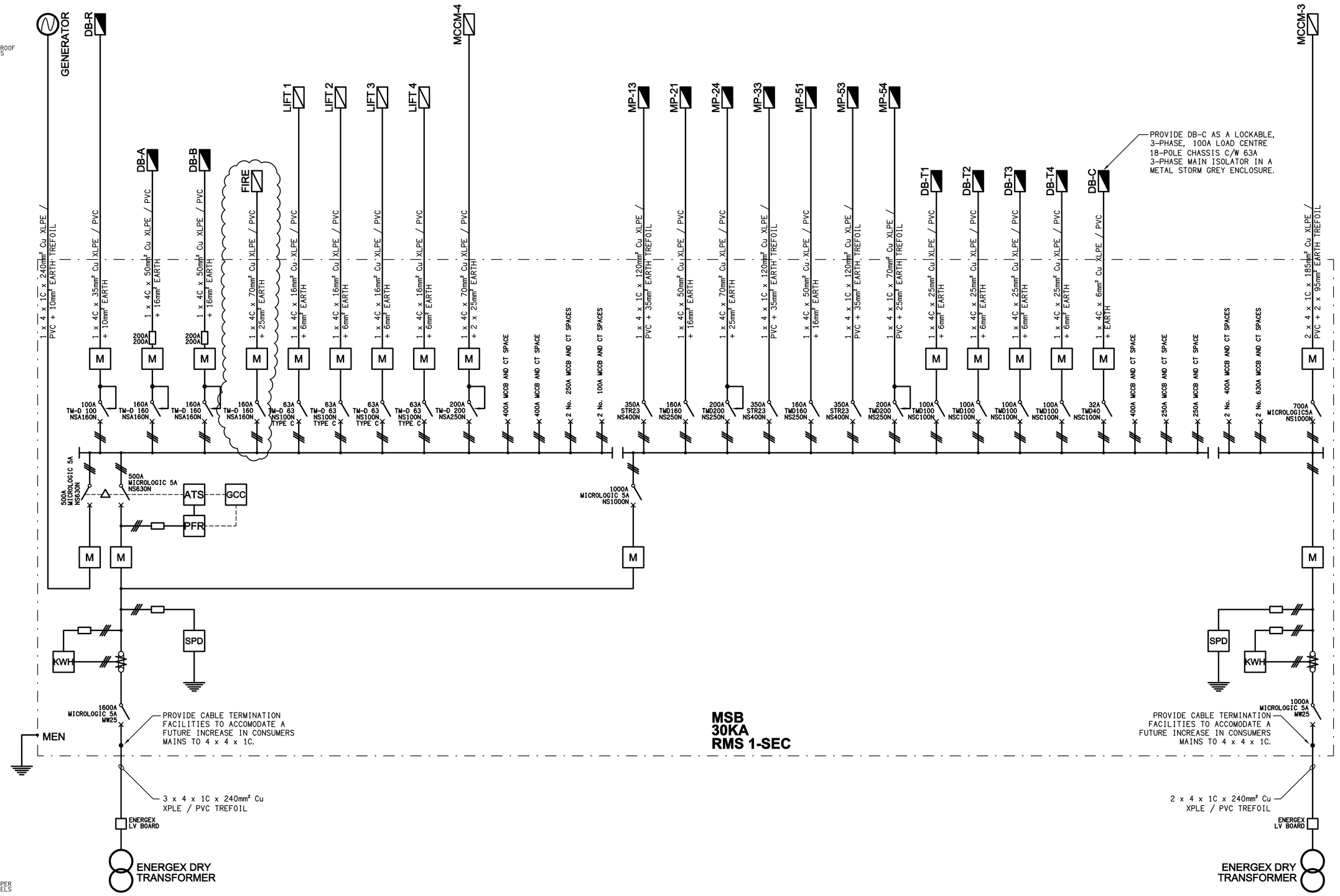

SCHEMATIC
MAINSWITCH BOARD
NOT TO SCALE

REV:	DESCRIPTION:	DATE:
H	CONSTRUCTION	17/07/2008

OFFICE USE ONLY: MARKUP: DRAFT: CHECK:

ELECTRICAL DESIGN GROUP BRISBANE PTY LTD
ACN 092 710 793

TRADING AS:
ELECTRICAL DESIGN GROUP

THE COPYRIGHT OF THIS DRAWING REMAINS THE PROPERTY OF THE ELECTRICAL DESIGN GROUP.

USE FIGURED DIMENSIONS IN PREFERENCE TO SCALE.

ALL DIMENSIONS TO BE VERIFIED ONSITE.

ELECTRICAL DESIGN GROUP
ELECTRICAL COMMUNICATIONS FIRE SYSTEMS DESIGNERS

BRISBANE
P.O.Box 15, Sherwood Q.4075
Phone: (07) 3278 4375
Fax: (07) 3716 0222

GOLD COAST
P.O.Box 4249, Ashmore Q.4214
Phone: (07) 5597 7551
Fax: (07) 5597 7552

PROJECT:
SYNERGY

LOTS 30 & 31 MUSK AVENUE, KELVIN GROVE URBAN VILLAGE

DRAWING:
ELECTRICAL SERVICES
POWER SCHEMATICS

SCALE: NOT TO SCALE AT A1

PROJECT NO:	DRAWING NO:	REVISION:
C0498a	E17	H