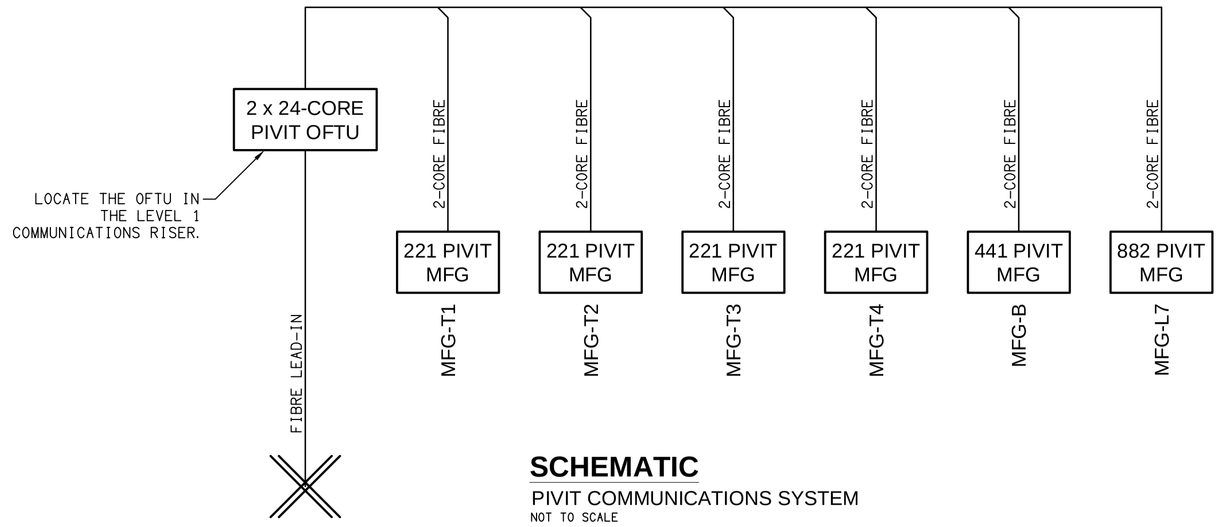

SCHEMATIC
PIVIT COMMUNICATIONS SYSTEM
NOT TO SCALE

EQUIPMENT:

TEST – TEST PUSH BUTTON MOUNTED ON THE DISTRIBUTION BOARD ESCUTCHEON.

RESET – RESET PUSH BUTTON MOUNTED ON THE DISTRIBUTION BOARD ESCUTCHEON.

LAMP – AMBER TEST INDICATING LAMP MOUNTED ON THE DISTRIBUTION BOARD ESCUTCHEON.

T1 – ADJUSTABLE 0-3 HOUR TIMED RELAY.

T2 – 15 MINUTE RUN-ON TIMER TO OPERATE UPON THE RETURN OF MAINS POWER.

Cx – CONTACTOR x.

CRx – CONTROL RELAY x.

Rx – RELAY x.

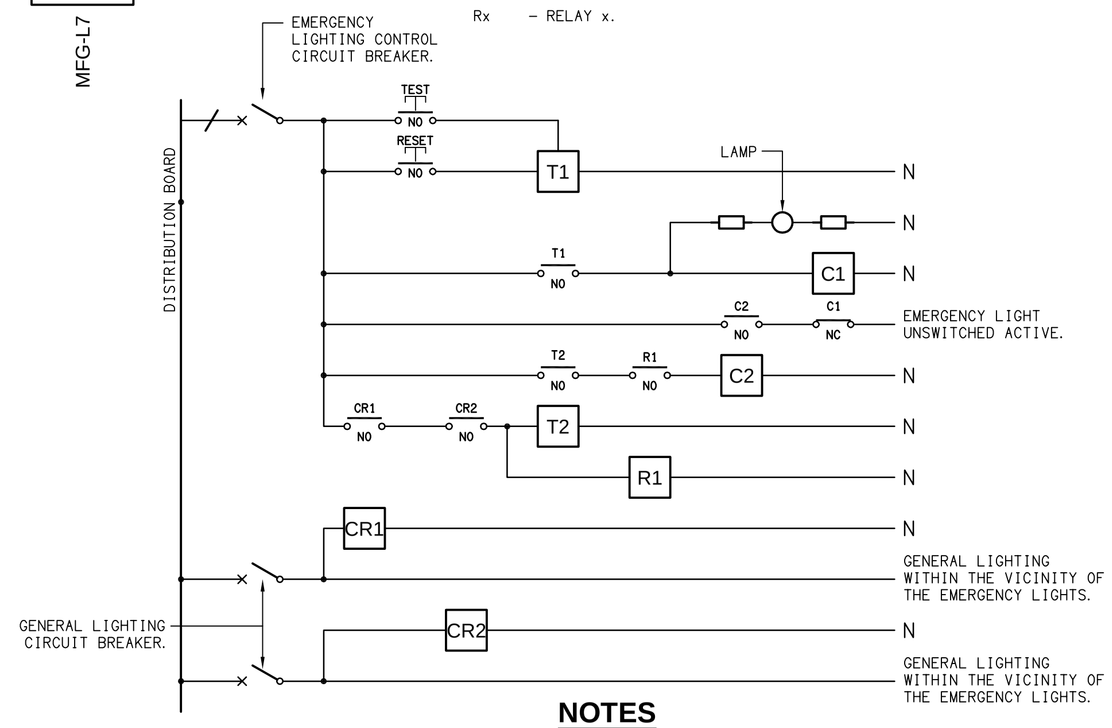

NOTES

1. THE EMERGENCY LIGHT UNSWITCHED ACTIVE / GENERAL LIGHTING SWITCHED ACTIVE CIRCUIT ARRANGEMENT AND CONTROL IS TYPICAL FOR ALL CIRCUITS SUPPLYING EMERGENCY LIGHTS.

2. PROVIDE ADDITIONAL CONTROL RELAYS (CRx) CONFIGURED AS PER CR1 AND CR2 FOR ALL ADDITIONAL LIGHTING CIRCUITS THAT SUPPLY LIGHTS IN THE VICINITY OF THE EMERGENCY LIGHTS.

SCHEMATIC
EMERGENCY LIGHTING
NOT TO SCALE

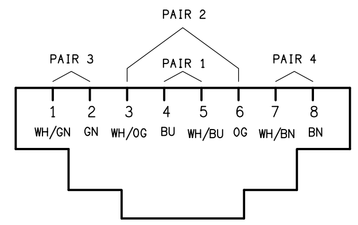

SCHEMATIC
RJ45 PINOUT CONFIGURATION
NOT TO SCALE

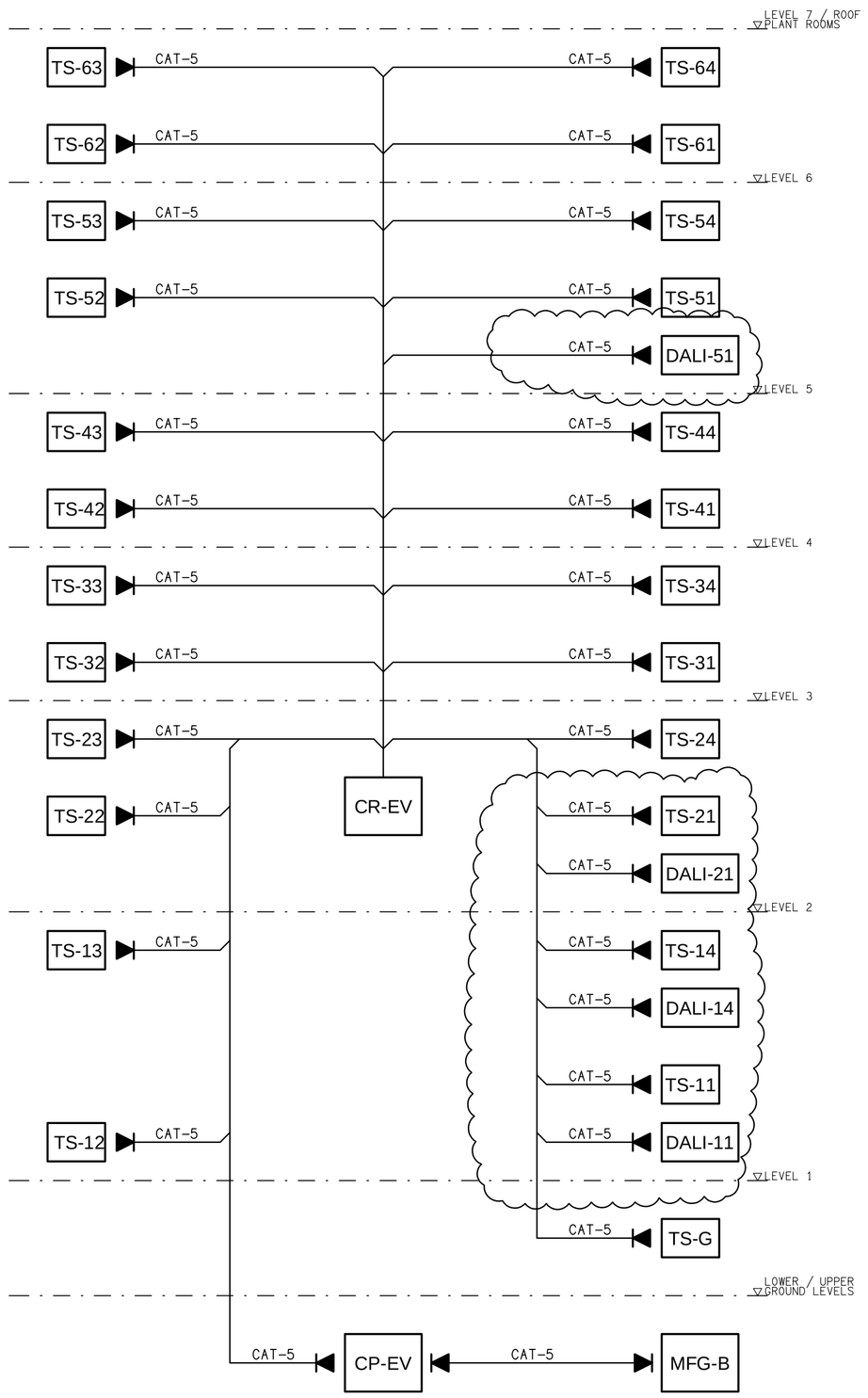

SCHEMATIC
ECOVISION SYSTEM CABLING
NOT TO SCALE

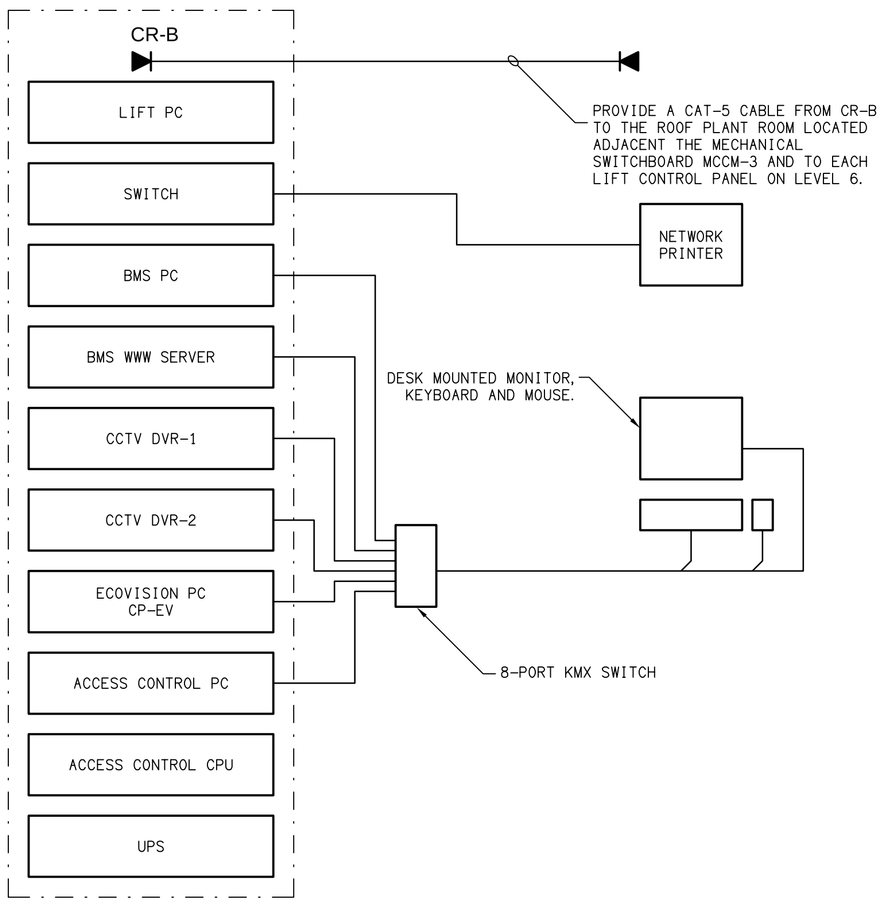

SCHEMATIC
COMMUNICATIONS RACK CR-B
NOT TO SCALE

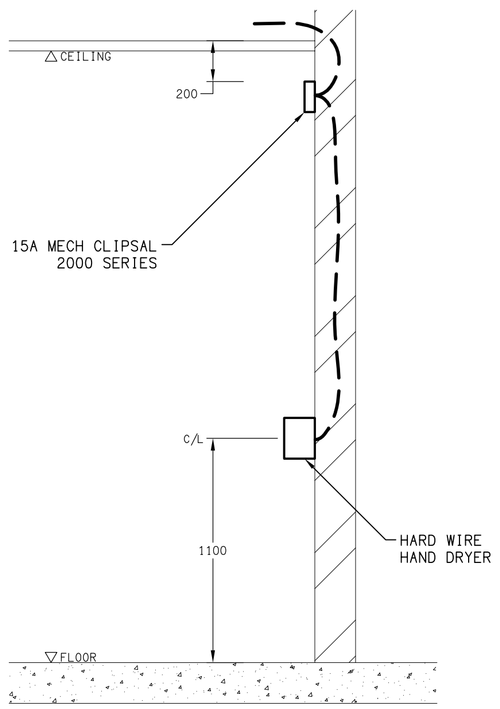

DETAIL
HAND DRYER CONNECTION
NOT TO SCALE

LEGEND
FUEL FLOW SYSTEM

BV	BALL VALVE.
F	FILTER.
GV	GATE VALVE.
MOV	MOTOR OPERATED VALVE.
NRV	NON-RETURN VALVE.
PUM	PUMP.
PRV	PRESSURE REDUCING VALVE.
~	FLEXIBLE CONNECTION.

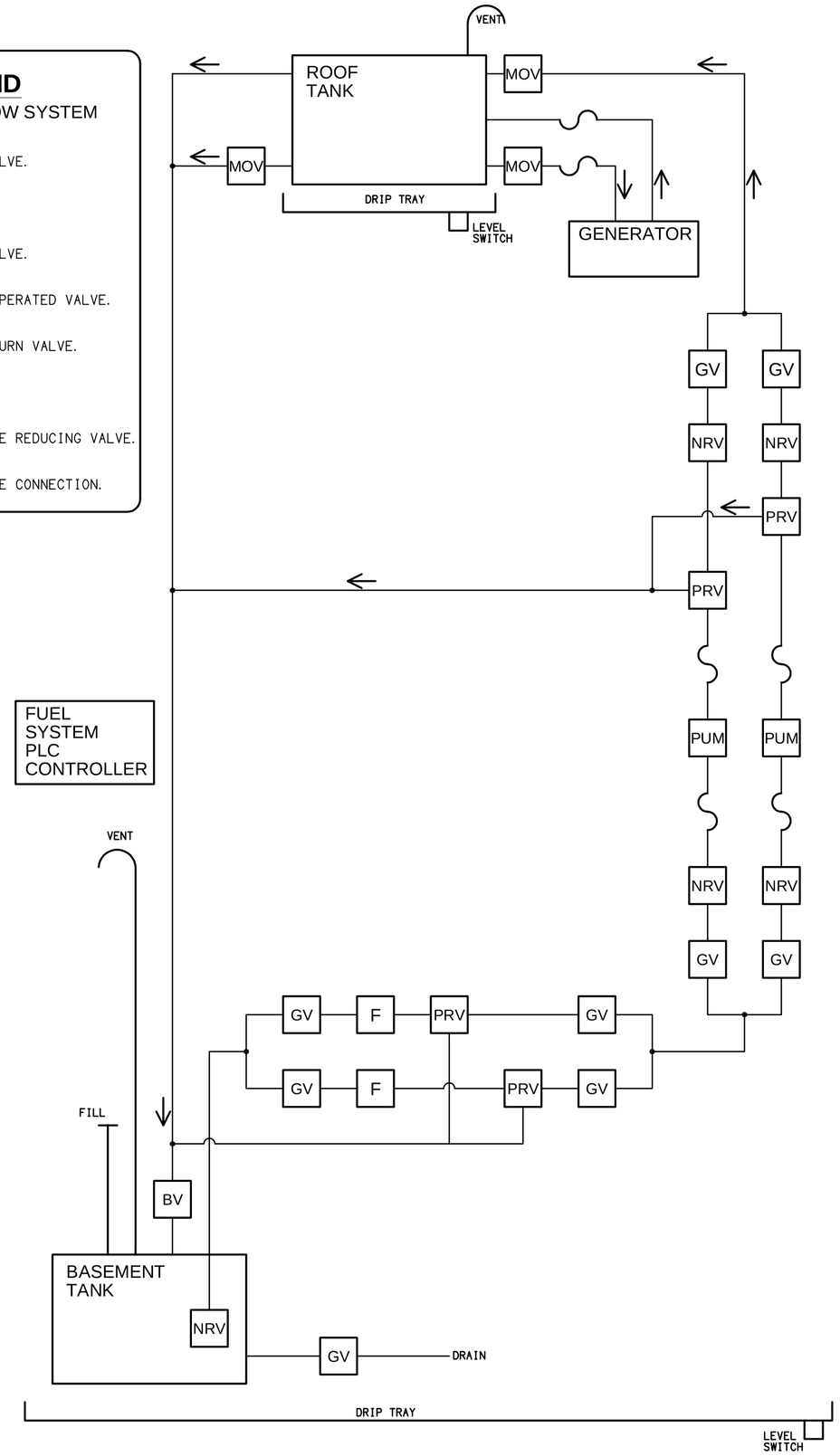

SCHEMATIC
FUEL FLOW SYSTEM
NOT TO SCALE

REV:	DESCRIPTION:	DATE:
D	CONSTRUCTION	29/02/2008

OFFICE USE ONLY: DRAFT: CHECK: MARKUP:

ELECTRICAL DESIGN GROUP BRISBANE PTY LTD ACN 092 710 793

TRADING AS: ELECTRICAL DESIGN GROUP

THE COPYRIGHT OF THIS DRAWING REMAINS THE PROPERTY OF THE ELECTRICAL DESIGN GROUP.

USE FIGURED DIMENSIONS IN PREFERENCE TO SCALE.

ALL DIMENSIONS TO BE VERIFIED ONSITE.

ELECTRICAL DESIGN GROUP
ELECTRICAL COMMUNICATIONS FIRE SYSTEMS DESIGNERS

BRISBANE
P.O.Box 15, Sherwood Q.4075
Phone: (07) 3278 4375
Fax: (07) 3716 0222

GOLD COAST
P.O.Box 4249, Ashmore Q.4214
Phone: (07) 5597 7551
Fax: (07) 5597 7552

PROJECT: SYNERGY

LOTS 30 & 31 MUSK AVENUE, KELVIN GROVE URBAN VILLAGE

DRAWING: **ELECTRICAL SERVICES**
SCHEMATICS & DETAILS

SCALE: NOT TO SCALE AT A1

PROJECT NO:	DRAWING NO:	REVISION:
C0498a	E02	D